6x3M Gazebo With Side Panels

Simple Assembly Instructions - Please keep for future reference | 651/0745

PLE 2014

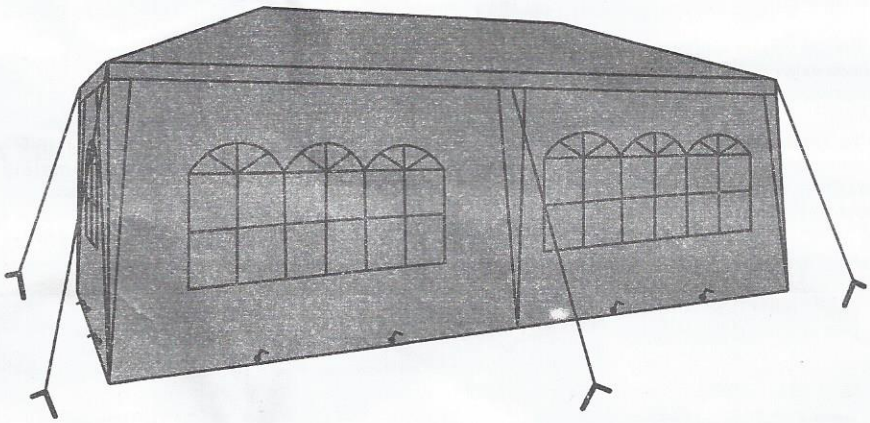

Dimensions
Width - 300cm
Depth - 600cm
Height - 270cm

Important – Please read these instructions fully before starting assembly

If you need help or have damaged or missing parts, call the Customer Helpline: 0845 640 0800
Retailer: Argos
Address: 489-499 Avebury Boulevard Saxon Gate West, Central Milton Keynes Bucks, MK9, 2NW

IMPORTANT SAFETY INSTRUCTIONS

Read all instruction before using and keep for future reference

• Read these instructions carefully and familiarise yourself with the procedure before assembling the unit.

• Check that you have all the component parts following the list on the page 3 and familiarise yourself with each part before proceeding.

• Take all the fittings out of the plastic bag and separate them into their groups.

• Ensure you have enough space to lay out all the parts before assembly.

• To avoid scratching it is recommended that you assemble the unit on a soft level surface.

• Please keep children away when assembly. Please keep children under direct supervision of adult when using.

• Please do not use the gazebo under windy condition.

• Always use guy rope and pegs to secure the gazebo when using.

• This Gazebo is not a permanent structure and should be disassembled and stored away after using.

• Do not repack your Gazebo until completely dry.

• We recommend assembly by four persons under light or no wind conditions.

•This Gazebo must not be left erect in windy conditions.

•Keep the Gazebo Fabric away from screws, nails, staples, hooks, etc to avoid damage to the fabric and frame.

• ***Warning:*** The unit weights approximately 22.5 kgs.

Please lift with care.

CAUTION

Fire precautions

• Do not place the Gazebo near lights, fireplaces, gas or electric heaters, candles, radiators, or any other sources of heat, fire or flammable liquids.

• This Gazebo features a Fabric cover that is not flame retardant.

• We recommend caution and common sense when in use.

• This Gazebo can burning.

• Do not use naked flames in or around the Gazebo. We recommend you advise no smoking while inside.

• This Gazebo has no flame retardant cooking area and should not be use to house BBQs or other cooking methods.

Safety

• To avoid any risks of suffocation to animals or children dispose of the plastic bags immediately.

Cleaning

• As with all surfaces clean with a damp cloth and mild detergent, do not use bleach or abrasive products.

Components - Parts

If you have damaged or missing components, call the Customer Helpline: 08456 400 800

Please check you have all the parts listed below

Ⓐ 1 x Gazebo Cover

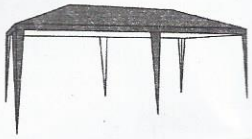

Ⓑ 6 x panel w/window

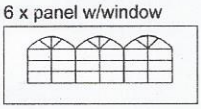

Ⓒ 6 x Baseplate

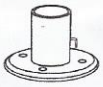

Ⓓ 2 x Centre Connector

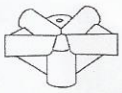

Ⓔ 2 x Middle Joint

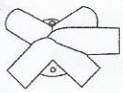

Ⓕ 4 x Corner Joint

① 8 x Top Pole (ϕ 24 x 1117 mm)

①A 8 x Top Pole (ϕ 24 x 1097 mm)

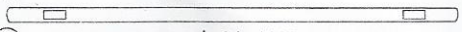

② 14 x Support Pole (ϕ 24 x 1117 mm)

②A 7 x Support Pole (ϕ 24 x 805 mm)

③ 6 x Leg Pole (ϕ 32 x 1022 mm)

④ 6 x Leg Pole (ϕ 32 x 1042 mm)

Components - Fittings

Please check you have all the fittings listed below

Note: The quantities below are the correct amount to complete the assembly. In some cases more fittings may be supplied than are required.

Ⓖ 24 x Peg

Ⓗ 6 x Guy Rope

Assembly Instructions

Stage 1- Fitting the Support Poles

Step 1

Insert Support Poles (2A) into the Support Poles (2) Ensure all the poles are fully inserted and secure. See fig.1.

IMPORTANT: Because of the size of this unit we recommend that it is built in the place intended for using

NOTE: Locate the unit on the flat Ground free from obstruction, in a sheltered area away from wind and heavy rain as this will damage the unit.

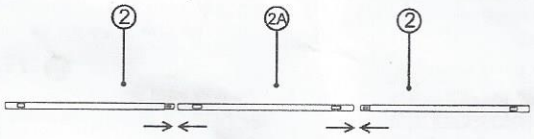

Fig.1

Step 2

Use corner joints (F) together with Middle joint (D) to connect the Support Poles .Ensure all the poles are fully inserted and secure.
See fig 2.

NOTE: It would be useful to ask someone to help you at this step.

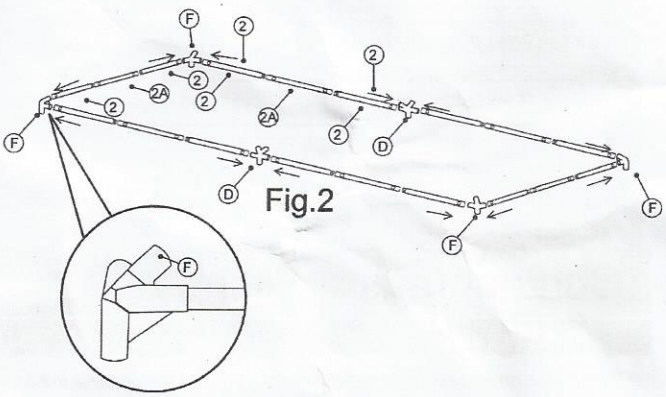

Fig.2

Assembly Instructions

Stage 2- Fitting the Top Poles

Step 3

Insert Top Poles (1A) into the Top Poles (1). Ensure all the poles are fully inserted and secure. See fig 3.

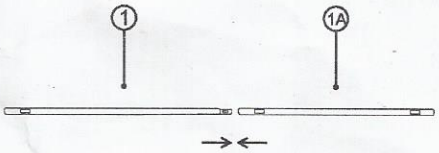

Fig.3

Step 4

Insert Supplemental Pole (2A) into the Support Poles (2). Ensure the 3 poles are fully connected and secure. See fig 4.

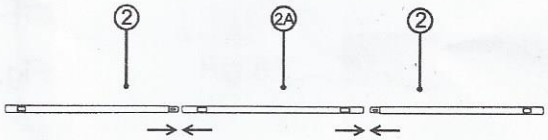

Fig.4

Step 5

Connect the Centre Connector (E) to Corner joint (F) and Middle Joint (D) by Top Poles of fig 3. See fig 5.

Link the two Centre Connector (E) together by connected poles of fig 4 See fig 5.

NOTE: It would be useful to ask someone to help you at this step.

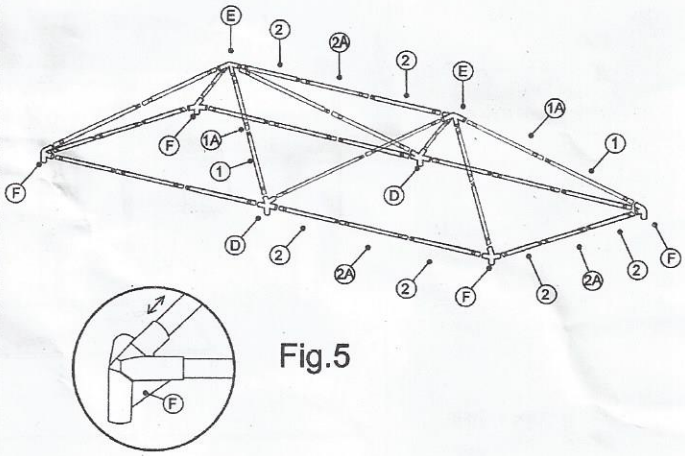

Fig.5

Assembly Instructions

Stage 3- Fitting the Gazebo

Step 6

Insert Leg Poles ③ into the unit. Ensure all the poles are fully inserted and secure.
See fig 6.

NOTE: It would be useful to ask someone to help you at this step.

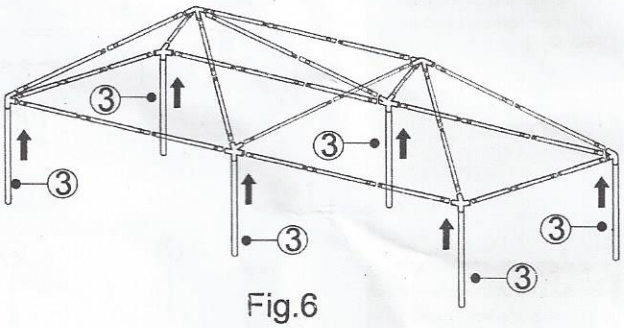

Fig.6

Step 7

Carefully place the Gazebo Cover Ⓐ over the assembled roof. Then pull the Gazebo tightly over the assembled roof frame.
See fig7.

NOTE: It would be useful to ask someone to help you at this step.

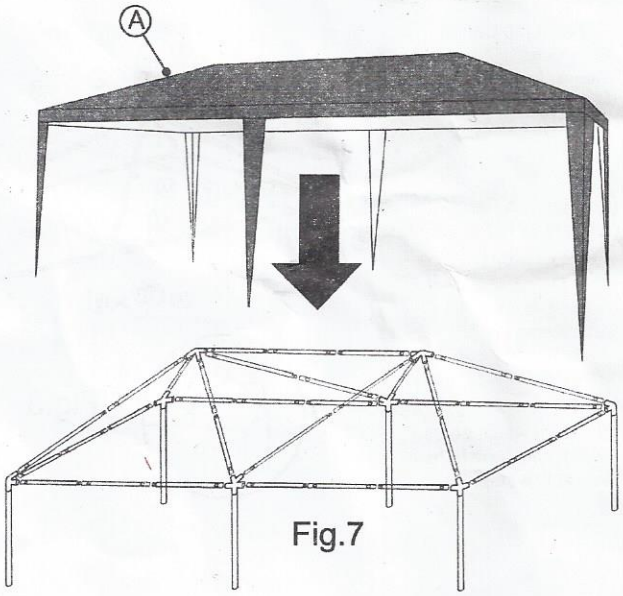

Fig.7

Assembly Instructions

Stage 4- Fitting the Legs

Step 8

Insert the Base Plates Ⓒ into the Leg Poles ④ Then insert the Leg Poles ④ into the unit. Ensure all the poles are fully inserted and secure. See fig 8.

NOTE: It would be useful to ask someone to help you at this step.

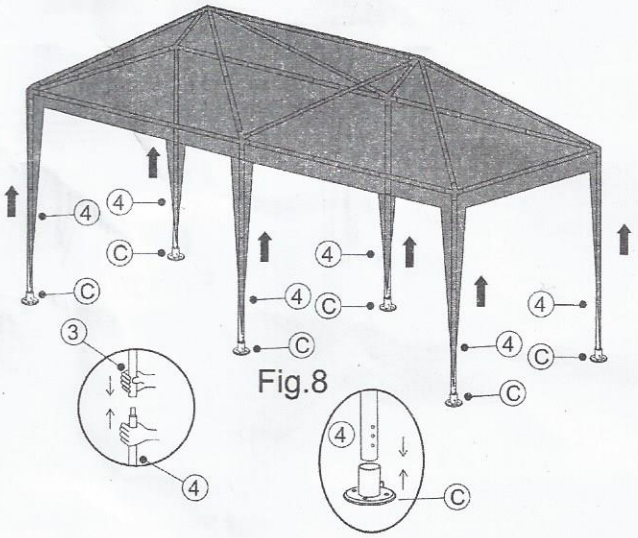

Fig.8

Step 9

Use the Velcro Tapes inside the Gazebo Cover to fix it onto the assembled Frame. See fig 9&10.

Ⓐ stretch the vercro tap tight
Ⓑ stick velcro tap

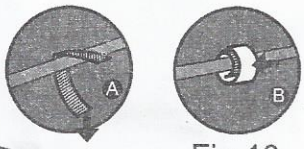

Fig.10

Attach the Gazebo Cover's Hooks into holes on the Leg Poles ④. Tighten by moving the Hook to a lower hole. See fig .11.

Warning: the velcro tap must stretch tight as this could cause rain water to collect on the canopy and cause a hazard.

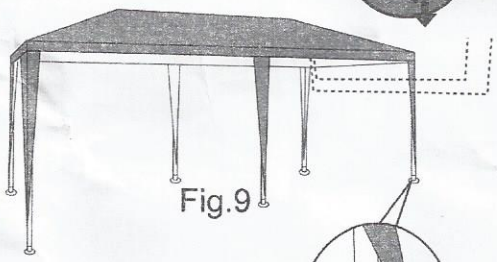

Fig.9

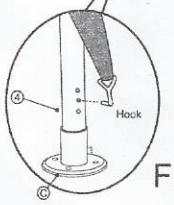

Fig.11

2013

Assembly Instructions

Stage 5- Fitting the Guy Ropes

Step 10

Attached the D ring onto the Base Plates (C). Then use Pegs (G) to fix the Base Plates (C) into the ground.
See fig 12&14.

Attach the end of the Guy Rope (H) to the corner of the top coverring on the Gazebo. Then attach one end to the peg (G) and drive the peg into the ground.
See fig 12, 13&15.

Use the Same method as in fig.12 to fix the other Guy Ropes.

The length of Guy Ropes can be adjusted.
See fig 16.

NOTE: The pegs are for location purposes only. They will not support the unit in high winds, see above instructions.

NOTE: It would be useful to ask someone to help you at this step.

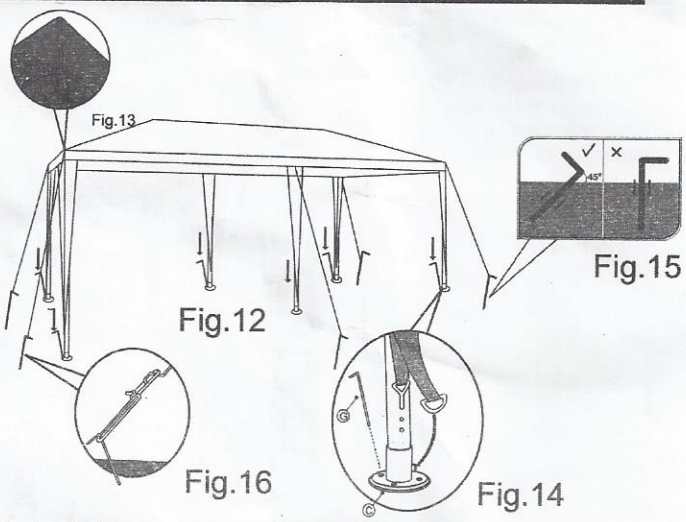

Stage 6- Fitting the Unit

Step 11

CAUTION: Do not assemble or disassemble during strong winds.

Hang on all 6 pcs Panels (B) at the top using the Velcro Tape, Velcro tapes at side of panels can be fastened to the Gazebo legs, Side Panels can be taken off separately.
Insert the peg onto the ring and drive the peg into the ground.
See fig 17,18,19&20.

Assemble is complete.

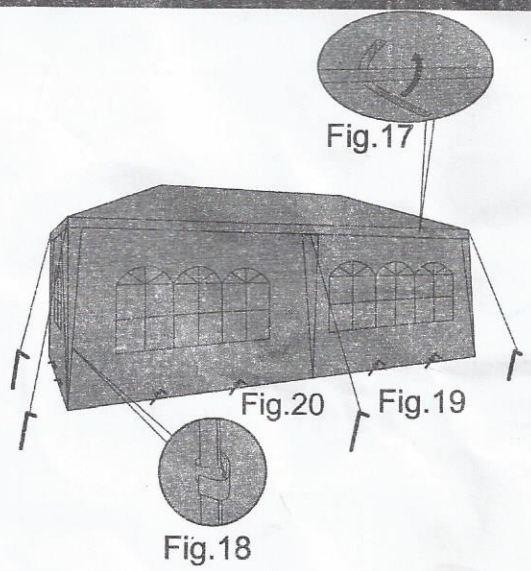

IMPORTANT:

Always use this product with caution and read the important safety instructions.

If you need help or have damaged or missing parts, call the Customer Helpline: 0845 640 0800
Retailer: Argos
Address: 489-499 Avebury Boulevard Saxon Gate West, Central Milton Keynes Bucks, MK9, 2NW